ROTAX RMC GRAND FINALS

PORTIMÃO

PORTUGAL

NOV 07–14, 2026

TECHNICAL REGULATIONS

JUNIOR MAX | SENIOR MAX | DD2 | DD2 MASTERS

FPAK
APROVADO
Lisboa, 06 de outubro de 2026
VISA FPAK nº 706/RMCGF/2026

Supported by:

© 2026 BRP-Rotax GmbH & Co KG. All rights reserved. ® and TM and the BRP logo are trademarks of Bombardier Recreational Products Inc. or its affiliates. All other trademarks are the property of their respective owners.

1. RMCGF 2026 CATEGORIES 3
2. EQUIPMENT 3
3. MODIFICATIONS, LEGAL ADDITIONS, NON-TECH ITEMS, MEASUREMENTS 7
4. TECHNICAL SPECIFICATIONS (OUTSIDE THE ENGINE AND CARBURETOR SEAL) FOR ROTAX KART ENGINES 7
5. PERMITTED ADJUSTMENTS TO THE CHASSIS, ENGINE, CARBURETTOR AND DRIVE TRAIN OPTIONS 18

© 2026 BRP-Rotax GmbH & Co KG. All rights reserved. ® and TM and the BRP logo are trademarks of Bombardier Recreational Products Inc. or its affiliates. All other trademarks are the property of their respective owners.

The Competition shall be run in accordance with the RMCGF 2026 Technical Regulations and official Bulletins and:
• ROTAX MAX CHALLENGE GRAND FINALS 2026 Sporting Regulations and the official Bulletins
• ROTAX MAX CHALLENGE GRAND FINALS 2026 Supplementary Regulations
• CIK/FIA Karting Technical Regulations and official Bulletins

The Organizer of the event reserves the right to issue modifications to the Technical Regulations, that will be published as Official Bulletins.

The English language is the official version.

Headings in this document are for ease of reference only and do not form part of these Technical Regulations.

1. RMCGF 2026 CATEGORIES

125 Junior MAX
125 Senior MAX
125 MAX DD2
125 MAX DD2 Masters

2. EQUIPMENT

The only equipment – complete kart and tyres – allowed during the event will be provided on a loan basis, by the organizer and must be in accordance with these Regulations and its Appendices.

2.1. Amount of equipment

2.1.1. One chassis, one engine/powertrain and tyres according to article 2.3.
2.1.2. Each driver will receive a complete kart drawn by raffle (chassis and engine/powertrain) - on a loan basis for the whole event -, according to the official time schedule.
2.1.3. The driver cannot refuse the vehicle that has been raffled.
2.1.4. No modification is allowed unless specified in the RMCGF Technical Regulations 2026 and its Appendices**.**
2.1.5. During the event drivers/competitors are not allowed to take the kart, or any part of it (except the battery and battery charger), outside the track facilities.
A Technical Scrutineer may check at any time during the event if the vehicle is complete in the designated pit space and all components are present.
If any element of the vehicle is missing, the driver will have the following penalties applied:

- Prior to qualifying, the driver will receive a 10 places penalty on the classification of the qualification.
- Prior to any race, the driver will receive a penalty of 10 seconds for the next race in which he will take part.
- In the event of a repeated infringement, the driver will be disqualified from the event.

2.1.6. Any equipment that was detected as missing must be controlled by the Technical Scrutineer and can also be replaced.

2.2. Chassis, Brake System, Bodywork

2.2.1. Single brand chassis per category, defined by tender. The brand for each category is:

- 125 Junior Max: Sodikart
- 125 Senior Max: Formula K – IPKarting
- 125 Max DD2: BirelART
- 125 Max DD2 Masters: Sodikart

2.2.2. Chassis are randomly assigned (on a loan basis for the time of the event) to drivers, registered and routinely checked/scanned by means of the Rotax EMS (Event Management System).
2.2.3. Chassis, brake system, bodywork and Rear Wheel protection system must have a valid CIK homologation and must be in accordance with RMCGF Technical Regulations 2026 and its Appendices.
2.2.4. Front brakes are not allowed in Rotax 125 Junior Max and 125 Senior Max categories.

© 2026 BRP-Rotax GmbH & Co KG. All rights reserved. ® and TM and the BRP logo are trademarks of Bombardier Recreational Products Inc. or its affiliates. All other trademarks are the property of their respective owners.

2.2.5. The Chief Scrutineer may allow some changes on the chassis, e.g. in case the height of a driver will not allow him/her to fit properly in the kart.
2.2.6. Every chassis is marked with a chassis seal with a unique serial number (barcode)
2.2.7. During the event, and in case of an accident, the driver can only change one time the chassis (frame) after the authorization of the Technical Scrutineers. In this case the frame and the other needed parts must be paid for in advance (prices will be defined in the manufacturers price list prior to the event).
2.2.8. Seat

- Original seat as supplied by the respective chassis supplier is legal to be used only.
- It is the Driver / Entrant responsibility to mount the seat in accordance with the regulations.
- All fixation screws and nuts for the seat must be mounted.
- Additional seat stays (supports) must be either fitted and tightened or removed from the chassis.
- Seat supports welded on the frame must not be bent except when authorized by the chassis manufacturer.
- Lead must be fitted to the seat only.

2.2.9. Axles: Only the original rear axle as supplied by the respective chassis supplier is legal to be used.

- Cutting the rear axle is not allowed.
- Fitting anything into the rear axle is not allowed!
- Stub axle adjustment must not be covered.

2.2.10. Stabilizer and sleeves must be either fitted and tightened or removed from the chassis.
2.2.11. Steering wheel can be mounted in any height positions to fit the driver using the standard or optional material as supplied/defined by the manufacturer. Steering shaft cannot be cut.
2.2.12. Floor tray: All screws and nuts must be fitted and tightened at all times.

- A data acquisition sensor must be mounted to one of the fixation screws of the floor tray.
- Drilling a hole/s in the floor tray is not allowed.
- To remove the footrest is an allowed adjustment.

2.2.13. The 2 supports for the rear bumper must be mounted tight to the frame at all times.
2.2.14. Only original brake pads as supplied by the chassis manufacturer for the Grand Final are legal to be used.
2.2.15. It is only allowed to use the parts, including rims, originally supplied by the chassis manufacturer.
2.2.16. Legal optional parts:

- Shorter pedals.
- Shorter brake rod.
- Angled steering wheel boss.
- Adjustable steering wheel boss.

2.2.17. Front fairing

a) The use of a homologated Front Fairing and of the homologated Front Fairing Mounting Kit of the bodywork homologation is mandatory for all categories, in accordance with CIK Specific Prescriptions, article 31 and CIK Technical Drawing No 2.2. and 2.2.1.
b) Appropriate fairings and mounting kits will be provided to Entrants/Drivers with each kart and are the only components which may be used.
c) The provisions of CIK General Prescriptions, article 2.3.3. regarding mounting, installation, checking, reporting of breaches and application of penalties will be applied in full.

2.3. Tyres

2.3.1. Type:

125 Junior MAX

Dry	Mojo D2XX CIK Option	front 4.5 x 10.0 – 5	rear 7.1 x 11.0 – 5
Wet	Mojo W5 CIK	front 4.5 x 10.0 – 5	rear 6.0 x 11.0 – 5

125 Senior MAX

Dry	Mojo D5 CIK Prime	front 4.5 x 10.0 – 5	rear 7.1 x 11.0 – 5
Wet	Mojo W5 CIK	front 4.5 x 10.0 – 5	rear 6.0 x 11.0 – 5

© 2026 BRP-Rotax GmbH & Co KG. All rights reserved. ® and TM and the BRP logo are trademarks of Bombardier Recreational Products Inc. or its affiliates. All other trademarks are the property of their respective owners.

125 MAX DD2			
Dry	Mojo D5 CIK Prime	front 4.5 x 10.0 – 5	rear 7.1 x 11.0 – 5
Wet	Mojo W5 CIK	front 4.5 x 10.0 – 5	rear 6.0 x 11.0 – 5
125 MAX DD2 Masters			
Dry	Mojo D5 CIK Prime	front 4.5 x 10.0 – 5	rear 7.1 x 11.0 – 5
Wet	Mojo W5 CIK	front 4.5 x 10.0 – 5	rear 6.0 x 11.0 – 5

2.3.2. Quantity for each category

1. Dry tyres:
   - 1 set is for non-qualifying practices (non parc fermé status).
   - 1 set is for qualifying up to and including finals (non parc fermé status). However, Stewards may decide, at any time, to keep the tyres in Parc Fermé for one or more categories.
2. Wet tyres:
   - Maximum one set of MOJO W5 CIK will be handed out for non-qualifying practices (non parc fermé status).
   - Organizer keeps the right to decide if a second set of MOJO W5 CIK will be handed out for qualifying practice up to and including final. This set will be mounted and kept in parc fermé.
   - Maximum 2 sets are available for the whole event for each category. They will only get handed out in case of rain.
3. Distribution and usage of tyres:
   - The first set of slick tyres will be handed out after the chassis raffle. This set shall be used during the event for all non-qualifying practices.
   - A certain number of used tyres from the first set (depending on the category) will be kept in parc fermé.
   - After the last session of the non-qualifying practice each driver will receive a new set of slick tyres, which has to be used for the qualification phase up to and including the final. Each tyre of this set is marked with a barcode and the starting number.
   - Each driver is responsible for checking that the marking of the starting number is visible outside, otherwise the tyre has to be presented in parc fermé for remarking.
   - If there is a reasonable risk for rain, wet tyres (MOJO W5 CIK) together with rims will be handed out in time. Each tyre of these sets is marked with a barcode and the starting number.
   - In case of mechanical failure of a tyre, each driver may exchange maximum 1 front and 1 rear tyre (each wet and dry), except if failure has been caused on purpose/misuse. In case of a mechanical failure of a tyre, the technical scrutineer will determine if the failure was due to material defect or has been caused on purpose/misuse. The technical scrutineer's decision will be final and not subject to protest or appeal.
   - If the failure has not been caused on purpose/misuse the following rule will apply:
     - In all categories a new tyre will be provided as replacement during Non-Qualifying Practice or before Qualifying. During Qualifying Heats, Pre-finals and Final a used tyre (with similar wear rate) will be provided as replacement.

2.3.3. All tyres are marked with barcode and can only be used by the assigned driver.

- Being proven that a tyre barcode sticker is not the original or it was manipulated, Driver will be disqualified from the event.
- At the entrance to the Start Servicing Parc, a Scrutineer will check the barcode stickers, and if there is any kind of suspicion that the barcode sticker was manipulated or changed, he will report immediately this fact to the Chief Scrutineer. From this moment on, the Driver and his kart are not allowed to access the Start Servicing Parc, until a final decision from the Chief Scrutineer.
- If during the Scrutineering Checks, after the Qualifying Practice or races, a kart is found that a tyre has one non original barcode sticker, he will be disqualified from the event.
- At the entrance of the Start Servicing Parc, a Driver who presents with his/her kart with one or more tyres not corresponding to those assigned to him for the event, will not be allowed to enter until he/she presents his kart with the right tyres, and as long as he/she will be within the stipulated time, defined on the official time schedule of the event, for access of his/her group to the Start Service Park.

2.3.4. Tyres are assigned (on a loan basis for the time of the event) to drivers, registered and routinely checked/scanned by means of the Rotax EMS (Event Management System).

© 2026 BRP-Rotax GmbH & Co KG. All rights reserved. ® and TM and the BRP logo are trademarks of Bombardier Recreational Products Inc. or its affiliates. All other trademarks are the property of their respective owners.

2.3.5. Strictly no modifications or any kind of chemical tyre treatment is allowed. Tyre check with “tyre sniffer” Mini-RAE-Lite: Maximum value = 4ppm. Over this value there will be a second check. If the value remains over the 4ppm, Driver will be disqualified from the event.
2.3.6. Tyres must be mounted in accordance with the rotation markings defined on the tyre.

2.4. Engines

- Every engine is sealed with an engine seal with a unique serial number (barcode).
- Engines are randomly assigned (on a loan basis for the time of the event) to drivers, registered and routinely checked/scanned by means of the Rotax EMS (Event Management System).
- The mandatory settings, permitted adjustments and optional parts are defined in these RMCGF Technical Regulations 2026 and its Appendices.
- For all components outside the engine seal, the competitor is responsible to assure the conformity with the RMCGF Technical Regulations 2026 and its Appendices.
- At any moment of the event, a Driver / Entrant cutting or manipulating any seal or modifying any of the engine, and/or carburettor will be disqualified from the event.

2.5. Return of equipment

- At the end of the event Drivers must return the equipment according to the information’s about time, location and procedures of how to return the equipment defined by the organization.
- Equipment must be returned in the same working conditions as delivered. All equipment must be fully cleaned before returned, otherwise a 200€ fee it will be charged.
- Any damaged or missing part of the engine or accessories, toolbox and trolley must be paid for.
- Any damaged part of the chassis must be paid for.
- People appointed by the organizer (Rotax and chassis suppliers) will be responsible for completing an extensive control of the material handed out to the Driver.

2.6. Data acquisition

Systems which permit the reading/recording of following data only are allowed:

a) Lap time
b) Engine rpm (by induction on the high-tension cable)
c) Engine coolant (water) temperature (sensor M10x1 mounted in the cylinder head)
d) The speed of one wheel
e) Acceleration in X/Y direction
f) Position (via GPS system)
g) Connection of the data acquisition system to the Rotax engine battery is allowed.

The ROTAX TRAX device is permitted to be used throughout the event.
The mounting position is free but must satisfy the chief scrutineer of the event.
The TRAX device must be connected to the Rotax engine battery only, additional batteries are not permitted for this device.
It is permitted to use the ROTAX TRAX 3D-Printered mount to secure the TRAX device to the ROTAX battery cover.
ROTAX Staff have full access to all data from any devices at any time during the event.

2.7. Safety equipment

According to Article 10.7. of RMCGF 2026 Sporting Regulations.

2.8. Fuel/Oil

Pre-mixed fuel will be provided via Parc Fermé for the whole event.

2.9. Advertising on engines

No sponsor stickers except ROTAX, BRP, MOJO, XPS are allowed on the engine and engine accessories.

© 2026 BRP-Rotax GmbH & Co KG. All rights reserved. ® and TM and the BRP logo are trademarks of Bombardier Recreational Products Inc. or its affiliates. All other trademarks are the property of their respective owners.

3. MODIFICATIONS, LEGAL ADDITIONS, NON-TECH ITEMS, MEASUREMENTS

3.1. Modifications

- Neither the engine nor any of its ancillaries may be modified in any way. "Modified" is defined as any change in form, content or function that represents a condition of difference from that originally designed. This is to include the addition and/or omission of parts and/or material from the engine package assembly unless specifically allowed within these rules. The adjustment of elements specifically designed for that purpose shall not be classified as modifications, i.e. carburettor and exhaust valve adjustment screws.
- Genuine ROTAX components only that are specifically designed and supplied for the 125 Junior MAX, the 125 Senior MAX and the 125 MAX DD2 engine are legal, unless otherwise specified.
- Anything which is not expressly allowed in the RMCGF Technical Regulations 2026, is forbidden.

3.2. Legal additions

Temperature sensor for engine coolant (water).
ROTAX TRAX device and ROTAX TRAX 3D-Printed mount as available at:
https://www.rotax-racing.com/assets/images/TRAX/3d_print_files/ROTAX_TRAX_MOUNT.zip

3.3. Measurements

When taking any dimensional reading, of the following technical regulation, in the order of accuracy of 0,10 mm or even more precise, the temperature of the part must be between +10°C and +30°C.

4. TECHNICAL SPECIFICATIONS (OUTSIDE THE ENGINE AND CARBURETOR SEAL) FOR ROTAX KART ENGINES

125 Junior MAX, 125 Senior MAX and 125 MAX DD2

For all components outside the engine and carburettor seal, the competitor is responsible to assure the conformity with the RMCGF Technical Regulations 2026.

4.1. Balance drive and Gear Oil

125 Junior MAX and 125 Senior MAX

Steel balance gears only (minimum width = 8,8 mm) are legal to be used.
Balance gears must be installed and must be aligned according to the illustration.

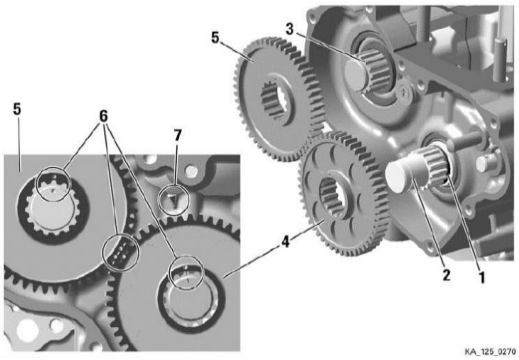

A minimum volume of 50ml of gear oil must be able to be sampled at all times during the event.
Oil as supplied must be used and changing of the gear oil for an alternative brand is not permitted.
The measured oil must be extracted by the competitor or representative via the port for this purpose in a maximum of 1 minute. It is the competitor's responsibility to capture all extracted oil in the provided container; any waste or spillage will not be counted as part of the measurement.
It is permitted to remove the engine from the kart and to tilt it during this process to help drain all the oil through the dedicated port.

© 2026 BRP-Rotax GmbH & Co KG. All rights reserved. ® and TM and the BRP logo are trademarks of Bombardier Recreational Products Inc. or its affiliates. All other trademarks are the property of their respective owners.

125 MAX DD2
Balance gear (1) must be fitted on primary shaft and must be aligned with the balance drive gear (2) according to the illustration. The minimum weight of a dry balance gear (1) including bearing must not be lower than 255 grams.

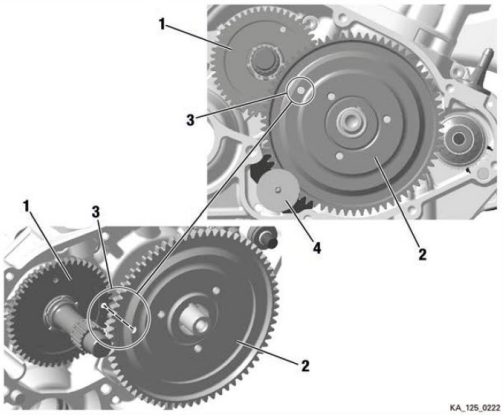

A minimum volume of 100ml of gear oil must be able to be sampled at all times during the event.
Oil as supplied must be used and changing of the gear oil for an alternative brand is not permitted.
The measured oil must be extracted by the competitor or representative via the port for this purpose in a maximum of 1 minute. It is the competitor's responsibility to capture all extracted oil in the provided container; any waste or spillage will not be counted as part of the measurement.
It is permitted to remove the engine from the kart and to tilt it during this process to help drain all the oil through the dedicated port.

4.2. Centrifugal clutch

125 Junior MAX and 125 Senior MAX
Engagement speed of centrifugal clutch at maximum 4.000 rpm (the kart without driver must start to move).

The clutch (1) must show the wording "ROTAX".
O-ring (2) must be fitted.
The clutch drum (3) must show the wording "ROTAX".

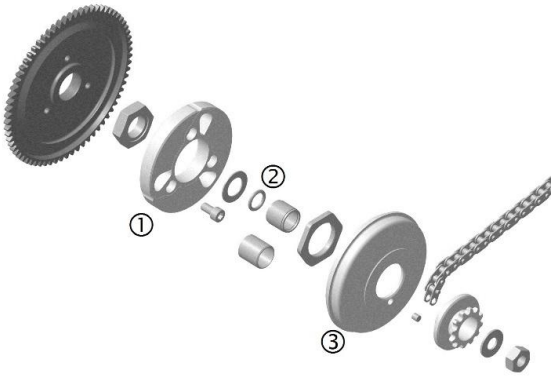

Signs of emission of grease or substance from the needle/plain bearing into the clutch drum may not exceed the like shown in the picture.
Contact area between clutch and clutch drum must be dry at any time – no substance allowed.

125 MAX DD2
Engagement speed of centrifugal clutch at maximum 4.000 rpm (the kart without driver must start to move).
The clutch (1) must show the wording "ROTAX".
O-ring (2) must be fitted.
The clutch drum (3) with drive gear must show the wording "ROTAX".

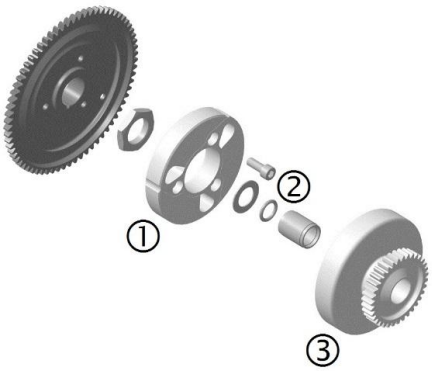

© 2026 BRP-Rotax GmbH & Co KG. All rights reserved. ® and TM and the BRP logo are trademarks of Bombardier Recreational Products Inc. or its affiliates. All other trademarks are the property of their respective owners.

Clutch
Height of clutch (B)
125 Junior MAX and 125 Senior MAX: Minimum = 11,45 mm
125 MAX DD2: Minimum = 14,45 mm

Thickness of clutch shoe (A)
Minimum = 24,10 mm

Measurement must be done at the 3 open ends of the clutch, 5 - 10 mm from the machined groove (all clutch shoes must be completely closed at measurement - no gap).

Clutch drum (125 Junior MAX, 125 Senior MAX and 125 MAX DD2)
Outer diameter (C) of clutch drum
Minimum = 89,50 mm
Diameter must be measured with a sliding calliper just beside the radius from the shoulder (not at the open end of the clutch drum).

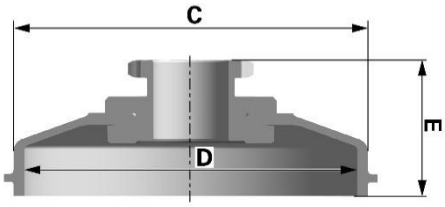

Inner diameter (D) of clutch drum
Maximum = 84,90 mm

Diameter must be measured with a sliding calliper. The measurement must be done in the middle of the clutch drum (in the contact area between clutch and clutch drum).
Height (E) of clutch drum with sprocket/primary gear:
125 Junior MAX and 125 Senior MAX – Minimum = 33,90 mm
125 MAX DD2 – Minimum = 39,50 mm

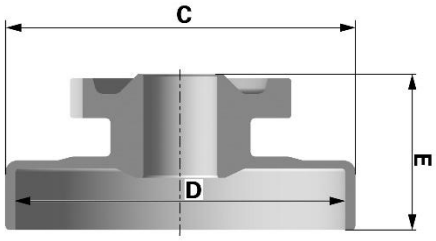

4.3. Primary drive (125 MAX DD2)
Original Rotax primary drive gears (4+5) must be used only.

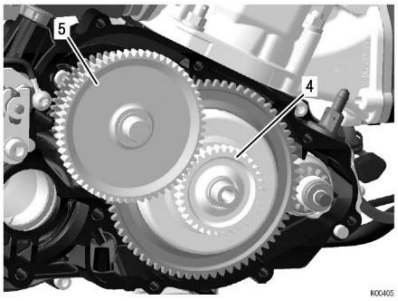

4.4. Gear shifting (125 MAX DD2)
The 2-speed gearbox must be operated from the steering wheel via the original Rotax paddle shift system (see illustration).
Cutting of the original aluminium shift paddles (30) or adding of non-original parts is not allowed. The only exception is the addition of padding or protective covers to the paddles.
Mounting the shift paddles (30) on the bottom or top side of the whip (23) is an allowed adjustment.
Optional parts (35-37) can be mounted on the shift paddle (30) in any position.
Bending the aluminium shift paddles to align them to the steering wheel is an allowed adjustment.
The whip (23) offers two connections for the cables (23) on each side for short travel or long travel. Both connections are legal to be used.
To change the connections of the cables to the whip (23) from left to right and right to left is an allowed adjustment.

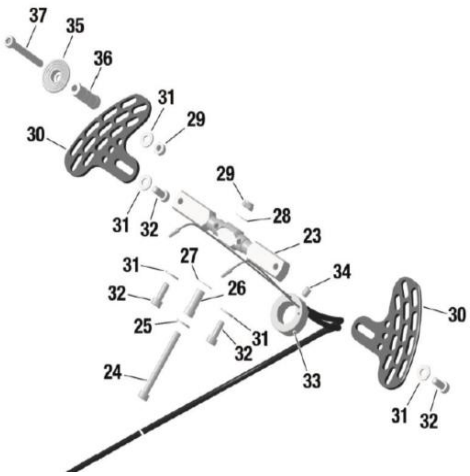

© 2026 BRP-Rotax GmbH & Co KG. All rights reserved. ® and TM and the BRP logo are trademarks of Bombardier Recreational Products Inc. or its affiliates. All other trademarks are the property of their respective owners.

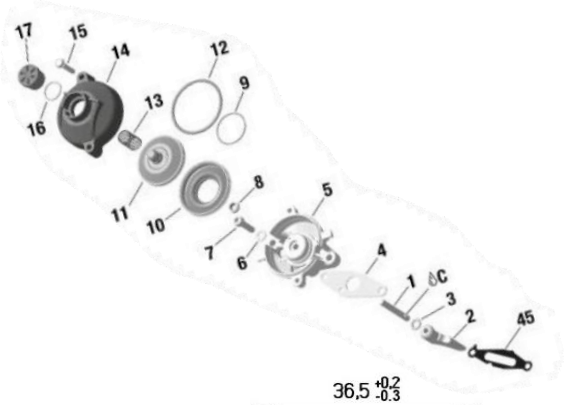

4.5. Exhaust valve (125 Senior MAX and 125 MAX DD2)

System must be used with all components fitted as shown in the illustration.
Bellow (10) must have green colour.

Exhaust valve

Length of the exhaust valve (item 2): 36,50 mm +0,20 mm/-0,30 mm.
Width of collar: 4,80 mm +/-0,30 mm.

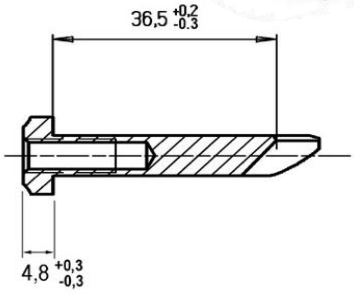

The use of the original impulse nozzle (1) in the pressure hose, connected to the magnet valve, is **not** allowed.

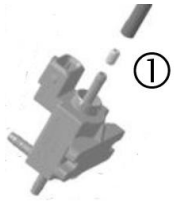

The electronic timed exhaust valve offers two different settings (A or B) for the opening of the exhaust valve.
(A)…additional ground cable not connected
(B)…additional ground cable connected
Both settings are legal to be used.

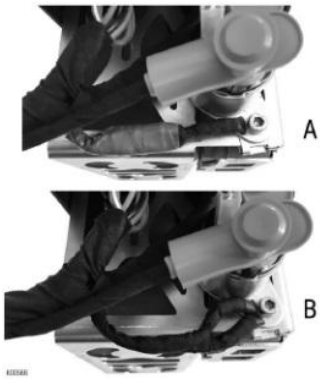

4.6. Ignition system

Dellorto digital battery ignition system, variable ignition timing, no adjustments possible.

Spark plug cap

Marked “ROTAX”, red colour (see picture)

© 2026 BRP-Rotax GmbH & Co KG. All rights reserved. ® and TM and the BRP logo are trademarks of Bombardier Recreational Products Inc. or its affiliates. All other trademarks are the property of their respective owners.

Spark plug
For all categories: It is only allowed to use the NGK GR8DI as identified in the picture and marked by the green circle.
The aftermarket part marked red circle with the extended electrode is strictly forbidden for use.

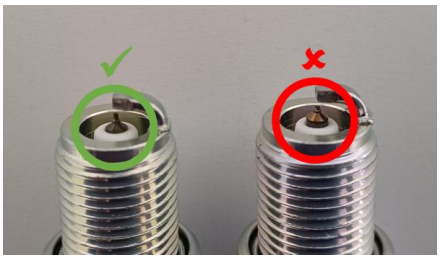

Ignition sensor
The marking of the pick-up must show the following numbers in the first line 029600-0710.
A steel ball (diameter 3-5 mm) placed on circular surface of the sensor must stay in the center of the circular surface.
The length from the sealing face / surface to the end of the pick-up as defined in the picture (A) must not exceed 26,30 mm. Measurement must be completed with gaskets removed. Signs of grinding or removal of material on the sealing face is strictly forbidden.
Fitting an additional gasket between the sensor and the crankcase is not allowed.

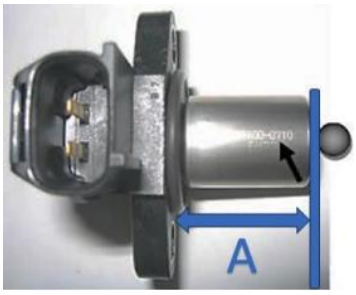

Ignition coil (and magnet valve - 125 Senior MAX and 125 MAX DD2 only) must be fitted with all components according to the illustrations below.
In case the mounting bracket (125 Junior MAX and 125 Senior MAX only) conflicts with a chassis component, the additions of 2 spacers, one per mounting hole, with a maximum thickness of 20 mm between the mounting bracket and the gearbox cover is allowed.

125 Junior MAX and 125 Senior MAX

125 MAX DD2

The visual appearance of the ignition coil must be identical with the pictures.
Ignition coil must show 2 pins at the terminal.
The ignition coil is labelled with two stickers, “BRP 666820” and “NIG 0105”.
The ignition coil is still legal to be used also if one or both stickers disappeared.
Minimum length of the high-tension cable of the ignition coil is 210 mm

© 2026 BRP-Rotax GmbH & Co KG. All rights reserved. ® and TM and the BRP logo are trademarks of Bombardier Recreational Products Inc. or its affiliates. All other trademarks are the property of their respective owners.

(from outlet of ignition coil to outlet of spark plug connector = visible length of cable).

The electronic control unit (ECU) is labelled with stickers and is still legal also if the sticker is unreadable or disappeared.
125 Junior MAX: “666813”
125 Senior MAX: “666815”
125 MAX DD2: “666816”
The ECU must be checked with the ECU tester (Rotax part no. 276230) according to following procedure.
Disconnect engine cable harness from ECU.
Connect ECU tester cable harness to ECU.
Connect energy cable of ECU tester cable harness with the charging connector of engine cable harness.
At every connection with the battery the software version of the ECU tester will be indicated on the display for approx. 2 seconds.
The software version indicated on the display must be 2V00.
Start the test by pressing the button “✓” on the ECU tester.
After approx. 3 second the type of ECU ① that is actually tested will be indicated in the second line of the display.
After approx. 30 seconds the result ② of the test will be indicated in the first line of the display.

The ECU tester must indicate following results:

125 Junior MAX category
① 666813JNRMAX
② !! Test OK !!

125 Senior MAX category
① 666815MAX
② !! Test OK !!

125 MAX DD2 category
① 666816MAXDD2
② !! Test OK !!

© 2026 BRP-Rotax GmbH & Co KG. All rights reserved. ® and TM and the BRP logo are trademarks of Bombardier Recreational Products Inc. or its affiliates. All other trademarks are the property of their respective owners.

4.7. Battery, battery fixation

Original battery with following specification must be used.
a) YUASA YT7B-BS (with “ROTAX” branding) as supplied.

b) Only if a driver is over the weight limit (must not have any lead ballast on the kart) the driver is permitted to use an own supplied ROTAX RX7-12B or RX7-12L or ROTAX LiFePo4 (Lithium iron phosphate type) during the event.
Note: its important the correct charger is used for such a battery.

ROTAX will not supply any Lithium chargers or Lithium batteries at the event this will be the responsibility of the competitor.

Battery must be fitted with the original battery clamp and battery cover (according to illustration below) on the left side of the seat.
Battery clamp (17) must be fixed to the chassis with two clamps (25-26) and 4 screws (25).

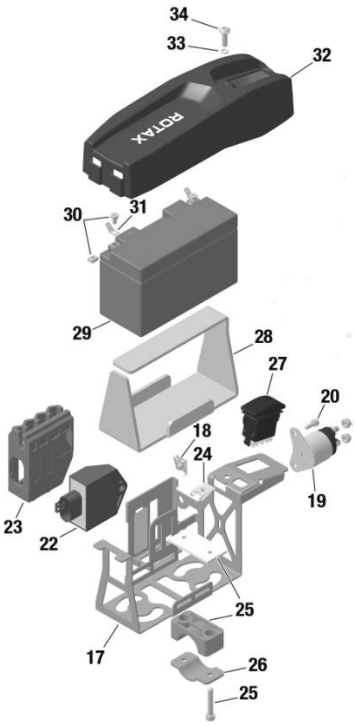

4.8. Intake silencer

a) 125 Junior MAX and 125 Senior MAX

- Intake silencer must be used with all parts as shown in the illustration and must be mounted on the support bracket with two screws (in dry and wet condition).
- Intake silencer tube (2) and carburettor socket (6) are marked with "ROTAX".
- Bottom intake silencer case (1) is marked on the inside with “225015”.
- Top intake silencer case (5) is marked on the inside with “225025”.
- Air filter has two layers and is marked with “Twin Air”.

- Air filter (4) must be installed as shown in the illustration between the two holders (3) and must cover the complete area of the bottom intake silencer case (1).

- In wet (and dry) conditions it is not allowed to attach anything to the air box to protect the air inlet from water spray.

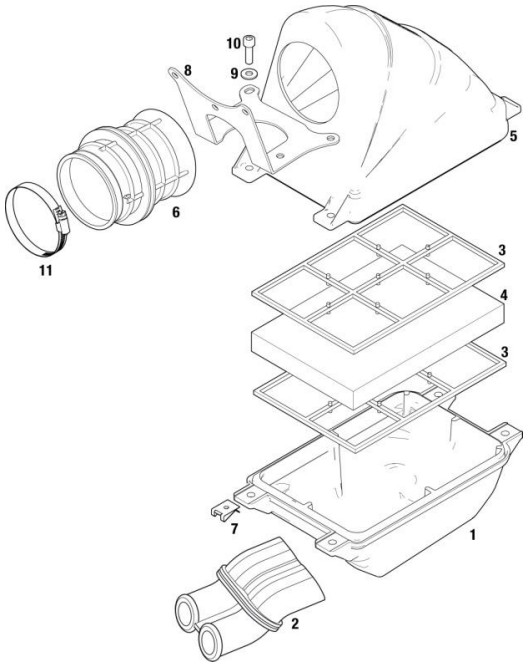

© 2026 BRP-Rotax GmbH & Co KG. All rights reserved. ® and TM and the BRP logo are trademarks of Bombardier Recreational Products Inc. or its affiliates. All other trademarks are the property of their respective owners.

b) 125 MAX DD2

- Intake silencer must be used with all parts as shown in the illustration.
- Intake silencer case (1) is marked on the inside with “225013”.
- Intake silencer cover (2) is marked on the inside with “225023”.
- Air filter (3) with separate plastic frame (4) must be used. Intake silencer tube (5) and carburettor socket (7) are marked with "ROTAX".
- The air filter must be assembled between the intake silencer case and the intake silencer cover that the whole area of the intake silencer case is covered.
- In wet (and dry) condition it is not allowed to attach anything to the air box to protect the air inlet from water spray.

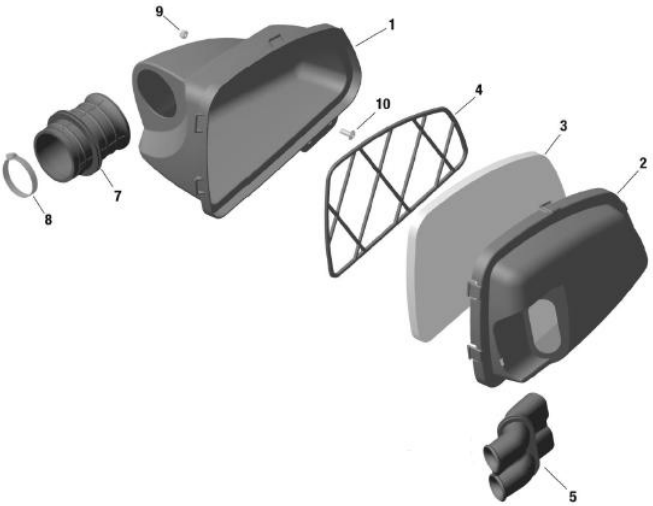

4.9. Carburettor

- Every carburettor is marked with a seal with a unique serial number (barcode).
- Carburettors are randomly assigned (on a loan basis for the time of the event) to drivers, registered and routinely checked/scanned by means of the Rotax EMS (Event Management System).
- Carburettor slide must show the digits “45” in casting.
- Jet needle must be stamped with “K57”. The position of the jet needle is free.
- Settings of the carburettor adjustment screws (idle and idle air) are free.
- All jets must be correctly seated and securely fitted at any time (tightened)!
- The lower entrance of the inlet bore of the carburettor must show a cast surface, strictly no machining allowed.
- Control machining maybe evident in and through the center of the venturi bore and on the edges of the venturi where it meets the cast body.
- The venturi hole of the carburettor insert can show signs of a CNC control machining.
- The two vent fittings must be connected to each other with the original air vent hose, minimum length = 155 mm.
- The ventilation hole of the vent hose must be placed at the rear side of the carburettor.
- The organiser / Technical scrutineer reserves the right to inspect and or exchange the carburettor or any of its components at any time during the event.

4.10. Fuel pump, fuel filter

125 Junior MAX – MIKUNI diaphragm pump (see picture left), must be used and must be mounted as shown in the illustration.
125 Senior MAX and 125 MAX DD2 – Dellorto fuel pump (see picture right), must be used and must be mounted as supplied.

a) 125 Junior MAX and 125 Senior MAX
Fuel pump must be mounted on the bottom side of the support bracket for the intake silencer.

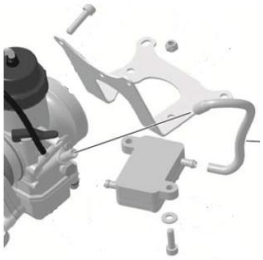

b) 125 MAX DD2
Fuel pump must be mounted on the original support bracket as supplied.

© 2026 BRP-Rotax GmbH & Co KG. All rights reserved. ® and TM and the BRP logo are trademarks of Bombardier Recreational Products Inc. or its affiliates. All other trademarks are the property of their respective owners.

Fuel filter

A fuel filter marked ROTAX is mandatory to be installed (see illustration). The fuel filter must be mounted between the fuel tank and prior to the fuel pump. Removing plastic molding marks from the inlet and outlet of the fuel filter is allowed.
Except the fuel line, the fuel pump and the original fuel filter no additional parts are legal to be mounted between fuel tank and carburettor.

4.11. Radiator

Radiator must be mounted with all components as shown in the respective illustration.
To apply tape (neutral tape without advertising only) around the radiator is an allowed modification to control the air flow through the radiator.
Tape may not be removed from the radiator during operation on the track.
Any other non-original device to control the air flow through the radiator is prohibited.

a) 125 Junior MAX and 125 Senior MAX

The radiator must be mounted on the right side of the engine.

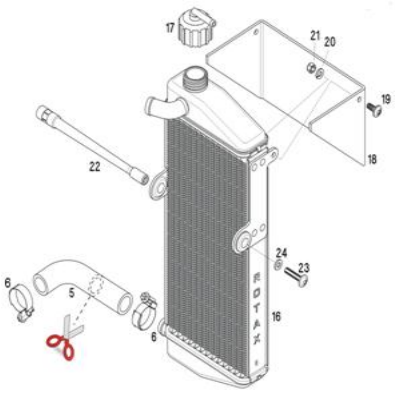

Radiator must be stamped on the side with “ROTAX”.
To remove the original flap is NOT allowed.

b) 125 MAX DD2

The radiator must be mounted on the left side beside the seat.
The highest point of the radiator with cap may not be higher than 400 mm above the main tube of the kart chassis.

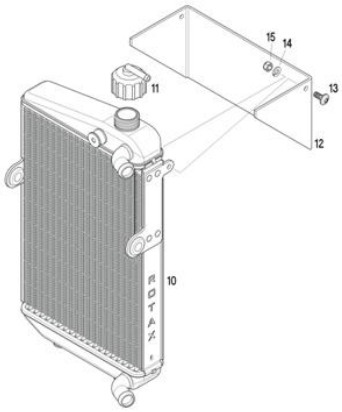

To remove the original flap is NOT allowed.

4.12. Engine coolant

Plain water without any additives must be used.

© 2026 BRP-Rotax GmbH & Co KG. All rights reserved. ® and TM and the BRP logo are trademarks of Bombardier Recreational Products Inc. or its affiliates. All other trademarks are the property of their respective owners.

4.13. Exhaust system

4.13.1. Exhaust socket

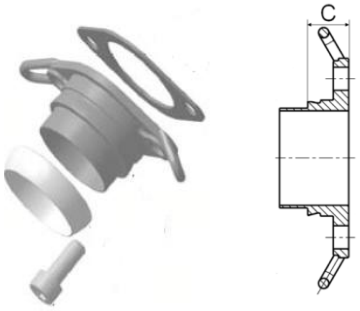

125 Junior MAX, 125 Senior MAX and 125 MAX DD2
The measurement (C) must be at least 15,5 mm.
The use of a minimum of 2 pieces and a maximum 4 pieces of original Rotax exhaust springs, to fix the exhaust system to the exhaust socket, is allowed.
The use of a minimum of 2 pieces and a maximum 4 pieces of original Rotax exhaust springs, to fix the silencer to the exhaust system is allowed.
To use a “safety wire” to fix the exhaust system to the exhaust socket is not allowed.

4.13.2. Exhaust pipe with silencer

Allowed modifications:

- Replacing the original rivets of the silencer end cap by 4 mm metric screws and corresponding locking nuts. The 3x fixations (rivets, bolts and locking nuts) must be always secured tight to ensure a sealing between the perforated tube and exhaust system. The perforated tube must be fully inserted into the exhaust system (see top, right picture for reference). External protrusion of the outer sealing ring of the perforated tube is forbidden (Indicated by the red arrow).
- Replacing the original isolating mat in the silencer by one new original isolating mat.

a) 125 Junior MAX and 125 Senior MAX

- The silencer must be mounted in a position where the direction of the 90° elbow outlet (direction of the hot exhaust gasses) does not harm any component of the chassis.
- Dimensions to be checked:
  Length of inlet cone: 590 mm +/-5 mm
  Length of cylindrical part of exhaust pipe: 130 mm +/-5 mm
  Length of end cone: 230 mm +/-5 mm

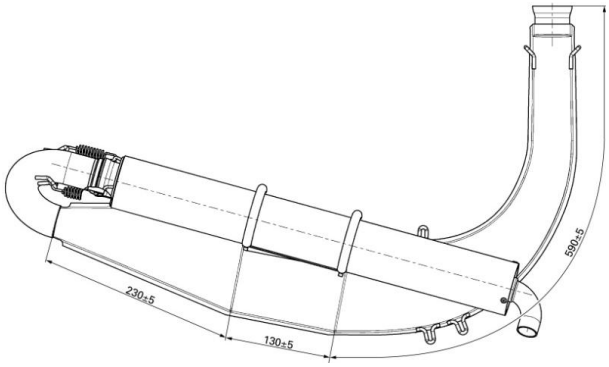

The only legal Isolation matting for 125 Junior and 125 Senior MAX is:
ROTAX part number 297982

New size minimum 480 x 270mm (+/-10mm)
New weight 207gr (176g – 238g)
Used weight minimum 140g
Used weight maximum 350g

© 2026 BRP-Rotax GmbH & Co KG. All rights reserved. ® and TM and the BRP logo are trademarks of Bombardier Recreational Products Inc. or its affiliates. All other trademarks are the property of their respective owners.

b) 125 MAX DD2

- The silencer must be mounted in a position where the direction of the 90° elbow outlet (direction of the hot exhaust gasses) does not harm any component of the chassis.
- Dimensions to be checked:
  Length of inlet cone: 575 mm +/-5 mm
  Length of central part: 80 mm +/-5 mm
  Length of end cone: 240 mm +/-5 mm

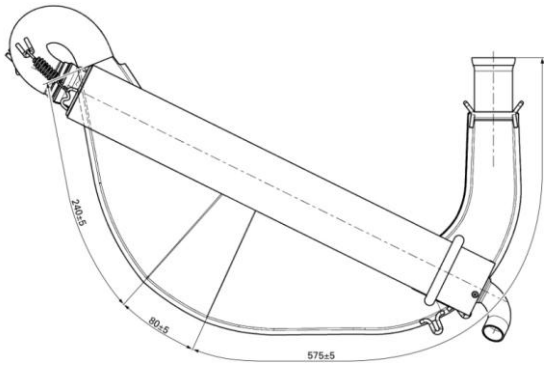

The only legal Isolation matting for 125 DD2 MAX is:
ROTAX part number 297982

New size minimum 480 x 270mm (+/-10mm)
New weight 207gr (176g – 238g)
Used weight minimum 140g
Used weight maximum 350g

4.14. Additional seat support (125 MAX DD2)

On the engine side, maximum one additional seat support can be used.
The additional seat support must be fastened to the engine using the Allen screw (2). The distance sleeve (3) may be removed for this purpose.

For the DD2 category, the seat support on the engine side, must be mounted as in the following picture. The uniball joint must always remain attached to the engine.

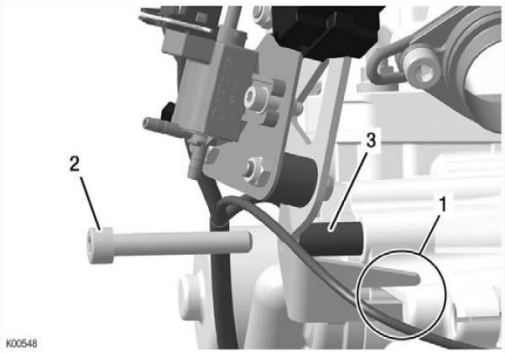

© 2026 BRP-Rotax GmbH & Co KG. All rights reserved. ® and TM and the BRP logo are trademarks of Bombardier Recreational Products Inc. or its affiliates. All other trademarks are the property of their respective owners.

5. PERMITTED ADJUSTMENTS TO THE CHASSIS, ENGINE, CARBURETTOR AND DRIVE TRAIN OPTIONS

I. 125 Junior MAX – Sodikart

No.	Item	Specification
1	Carburation and gearing mandatory for the 1st free practice.	132 Main Jet must be installed Front sprocket 13, Rear sprocket 71 teeth
2	Carburation and gearing options for the 2nd free practice through to the Finals	Any main jet from the kit supplied can be used (125, 126, 127, 128, 129, 130, 131, 132, 133 and 134) Front sprocket 13 or (12 tooth, just in combination with wet tyres) Rear sprocket 71, 72 and 73 teeth
3	Spark plug type and gap	NGK GR8DI. Pin gauge 1,00 mm must not fit in between the two electrodes
4	Chain length and type	Only chains as supplied at the event by the manufacturer are legal to be used. 102 chain length Oring
5	Ride height	Front: All settings allowed Rear: All settings allowed
6	Camber and Castor	Camber: All settings allowed Castor: 1° adjuster allowed only
7	Ackerman settings	Steering column : 3 positions Stub axle : Outside only
8	Seat supports	No additional seat supports allowed
9	Seat fixing	All fixing must be tightly secured.
10	Rear bumper	It's allowed to move vertically not horizontal
11	Other notes	Side pod bars must secured tight at all times
12	Optional parts	2 versions of peddle kit are allowed. Angled steering wheel boss. One additional plastic shim with an angle of 8° is allowed

From the 2nd non-qualifying practice ROTAX recommends: Jet 128, needle position 4, 0,65 mm spark plug gap and 55°C engine temperature

Note: Only standard components as supplied at the event by the manufacturer for the specific category may be used in accordance with the RMCGF Technical Regulations 2026 and its appendices.

© 2026 BRP-Rotax GmbH & Co KG. All rights reserved. ® and TM and the BRP logo are trademarks of Bombardier Recreational Products Inc. or its affiliates. All other trademarks are the property of their respective owners.

II. 125 Senior MAX – Formula K – IPKarting

No.	Item	Specification
1	Carburation and gearing mandatory for the 1st free practice.	132 Main Jet must be installed Front sprocket 13, Rear sprocket 73 teeth
2	Carburation and gearing options for the 2nd free practice through to the Finals	Any main jet from the kit supplied can be used (125, 126, 127, 128, 129, 130, 131, 132, 133 and 134) Front sprocket 13 or (12 tooth, just in combination with wet tyres) Rear sprocket 73, 74 or 75 teeth
3	Spark plug type and gap	NGK GR8DI. Pin gauge 1,00 mm must not fit in between the two electrodes
4	Chain length and type	Only chains as supplied at the event by the manufacturer are legal to be used. 104 chain length with o-ring
5	Ride height	Front and Rear: Must not be used in the lowest position
6	Camber and Castor	All caster adjustments must be made using the top caster pill only. The bottom caster pill must remain standard as supplied with the chassis. The standard caster setting supplied with the chassis is 0°. Optional caster pills of 0.5°, 1° and 2° are allowed. The caster pill must remain clearly visible at all times and must not be covered or concealed.
7	Ackerman settings	All settings allowed
8	Seat supports	Only 1 x left and 1 right optional seat supports can be used. If fitted they must be tightly secured.
9	3rd Bearing	Not supplied and must not be used
10	Axle bearing support	It's mandatory in all conditions to use the screws as supplied by the manufacturer with the chassis (4 pcs. M8 screws and 2 pcs. M6 screws). Optional, you can also use the 2 upper M8 screws.
11	Rear bumper	It's allowed to move vertically not horizontal
12	Front torsion bar	Must be fitted and secured to the chassis at all times with both clamps.
13	Exhaust silencer brackets	Must be used as supplied by the manufacturer. Height and position cannot be modified.
14	Optional parts	Adjustable steering wheel hub, only 1 pcs. slanted additional plate, adjustable footrest system (all this parts must be marked IPK engineering). Seat padding kit.

From the 2nd non-qualifying practice ROTAX recommends: Jet 129, needle position 4, 0,65 mm spark plug gap and 55°C engine temperature

Note: Only standard components as supplied at the event by the manufacturer for the specific category may be used in accordance with the RMCGF Technical Regulations 2026 and its appendices.

© 2026 BRP-Rotax GmbH & Co KG. All rights reserved. ® and TM and the BRP logo are trademarks of Bombardier Recreational Products Inc. or its affiliates. All other trademarks are the property of their respective owners.

III. 125 MAX DD2 – BirelART

No.	Item	Specification
1	Carburation and gearing mandatory for the 1st free practice.	134 Main Jet must be installed Gear ratio set 36 / 61 **Please note: you will need to install the correct main jet**
2	Carburation and gearing options for the 2nd free practice through to the Finals	Any main jet from the kit supplied can be used (128, 129, 130, 131, 132, 133, 134, 135, 136, 137 & 138) Gear ratio sets (36 / 61), (37 / 60) or (35 / 62 in combination with wet tyres only)
3	Spark plug type and gap	NGK GR8DI. Pin gauge 1,00 mm must not fit in between the two electrodes
4	Ride height	Front: As supplied (middle) or chassis high Rear: As supplied – No adjustments allowed
5	Camber and Castor	0, 0,5, 1,5 deg allowed. All adjustments are allowed (only 1 pair / kit of 1,5 deg castor is allowed to be used)
6	Ackerman settings	All 2 positions are allowed
7	Seat supports	Up to a maximum of 2 additional seat supports on the left and one right are allowed
8	Seat fixing	Upper mountings must always be tight, the front lower supports can be loosed
9	Rear bumper	It's allowed to move vertically not horizontal
10	Other notes	Steering column 520 mm is allowed
11	Optional parts	Steering plate number 2

From the 2nd non-qualifying practice ROTAX recommends: Jet 132, needle position 4, 0,65 mm spark plug gap and 55°C engine temperature

Note: Only standard components as supplied at the event by the manufacturer for the specific category may be used in accordance with the RMCGF Technical Regulations 2026 and its appendices.

© 2026 BRP-Rotax GmbH & Co KG. All rights reserved. ® and TM and the BRP logo are trademarks of Bombardier Recreational Products Inc. or its affiliates. All other trademarks are the property of their respective owners.

IV. 125 MAX DD2 Masters – Sodikart

No.	Item	Specification
1	Carburation and gearing mandatory for the 1st free practice.	134 Main Jet must be installed Gear ratio set 36 / 61 **Please note: you will need to install the correct main jet**
2	Carburation and gearing options for the 2nd free practice through to the Finals	Any main jet from the kit supplied can be used (128, 129, 130, 131, 132, 133, 134, 135, 136, 137 & 138) Gear ratio sets (36 / 61), (37 / 60) or (35 / 62 in combination with wet tyres only)
3	Spark plug type and gap	NGK GR8DI. Pin gauge 1,00 mm must not fit in between the two electrodes
4	Ride height	Front: All settings allowed Rear: As supplied – No adjustments allowed
5	Camber and Castor	Camber: All settings allowed Castor: 1° adjuster allowed only
6	Ackerman settings	All 2 positions are allowed
7	Seat supports	Steering column: 3 positions Stub axle: Outside only
8	Seat fixing	All fixing must be tightly secured.
9	Rear bumper	It's allowed to move vertically not horizontal
10	Other notes	Side pod bars must secured tight at all times
11	Optional parts	2 versions of peddle kit are allowed. Angled steering wheel boss. One additional plastic shim with an angle of 8° is allowed

From the 2nd non-qualifying practice ROTAX recommends: Jet 132, needle position 4, 0,65 mm spark plug gap and 55°C engine temperature

Note: Only standard components as supplied at the event by the manufacturer for the specific category may be used in accordance with the RMCGF Technical Regulations 2026 and its appendices.

---------- END OF TECHNICAL REGULATION ----------

© 2026 BRP-Rotax GmbH & Co KG. All rights reserved. ® and TM and the BRP logo are trademarks of Bombardier Recreational Products Inc. or its affiliates. All other trademarks are the property of their respective owners.